Rounded oval cylinder pull



Product image

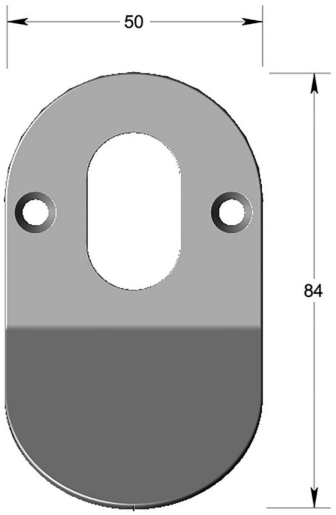

Dimensions drawing (DIM)

Reference

FCP008 STBK

Material

Stainless steel 316

Finish

Diamond Ceramic ULTRA BLACK

Description

Cutout to suit Oval cylinder
Face fixing with wood screws
Rounded edges

Specifications Division
Unit 8 Orpington Business Park
Orpington Kent BR5 3AA

franchi.co.uk **contracts@franchi.co.uk** **+44 (0) 16 8938 7900**