Traditional Wedge lever on long backplate

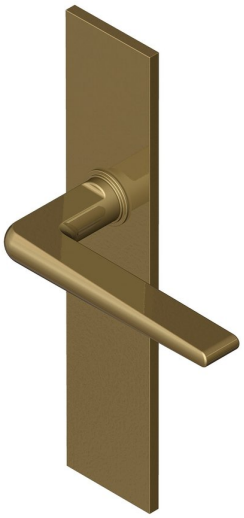

Product image

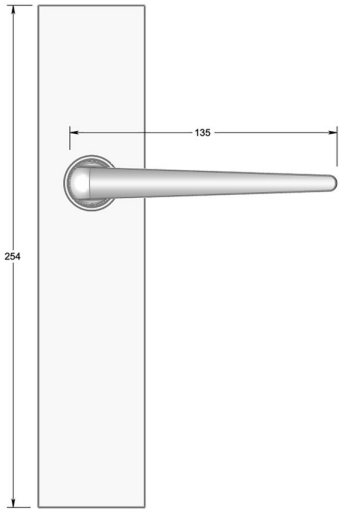

Dimensions drawing (DIM)

Reference

FL210 TB01 ABR

Material

Brass

Finish

Trad antique brass

Backplate

TB01

Description

Solid cast handle
Concealed fixing
High performance bearing
Supplied with fixings for timber
Available with various backplates and roses

Specifications Division
Unit 8 Orpington Business Park
Orpington Kent BR5 3AA

franchi.co.uk **contracts@franchi.co.uk** **+44 (0) 16 8938 7900**