Disabled bar turn on oval 4mm rose

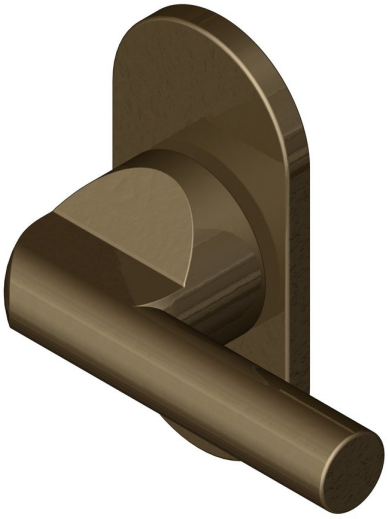

Product image

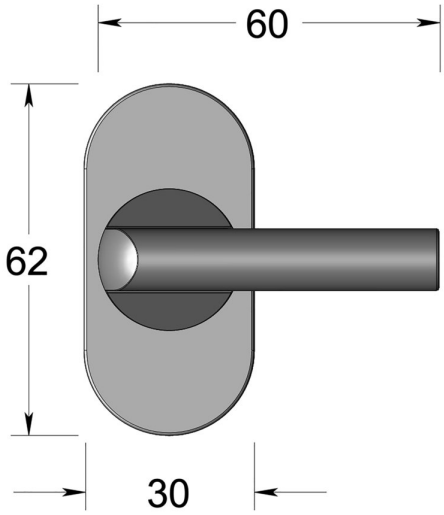

Dimensions drawing (DIM)

Reference

FTT004 OR4 MBZ

Material

Brass

Finish

Incasa medium bronze

Backplate

OR4

Description

Concealed fixing rose
Solid thumb turn

Specifications Division
Unit 8 Orpington Business Park
Orpington Kent BR5 3AA

franchi.co.uk **contracts@franchi.co.uk** **+44 (0) 16 8938 7900**